VIESSMANN®

climate of innovation®

Heating with Wood

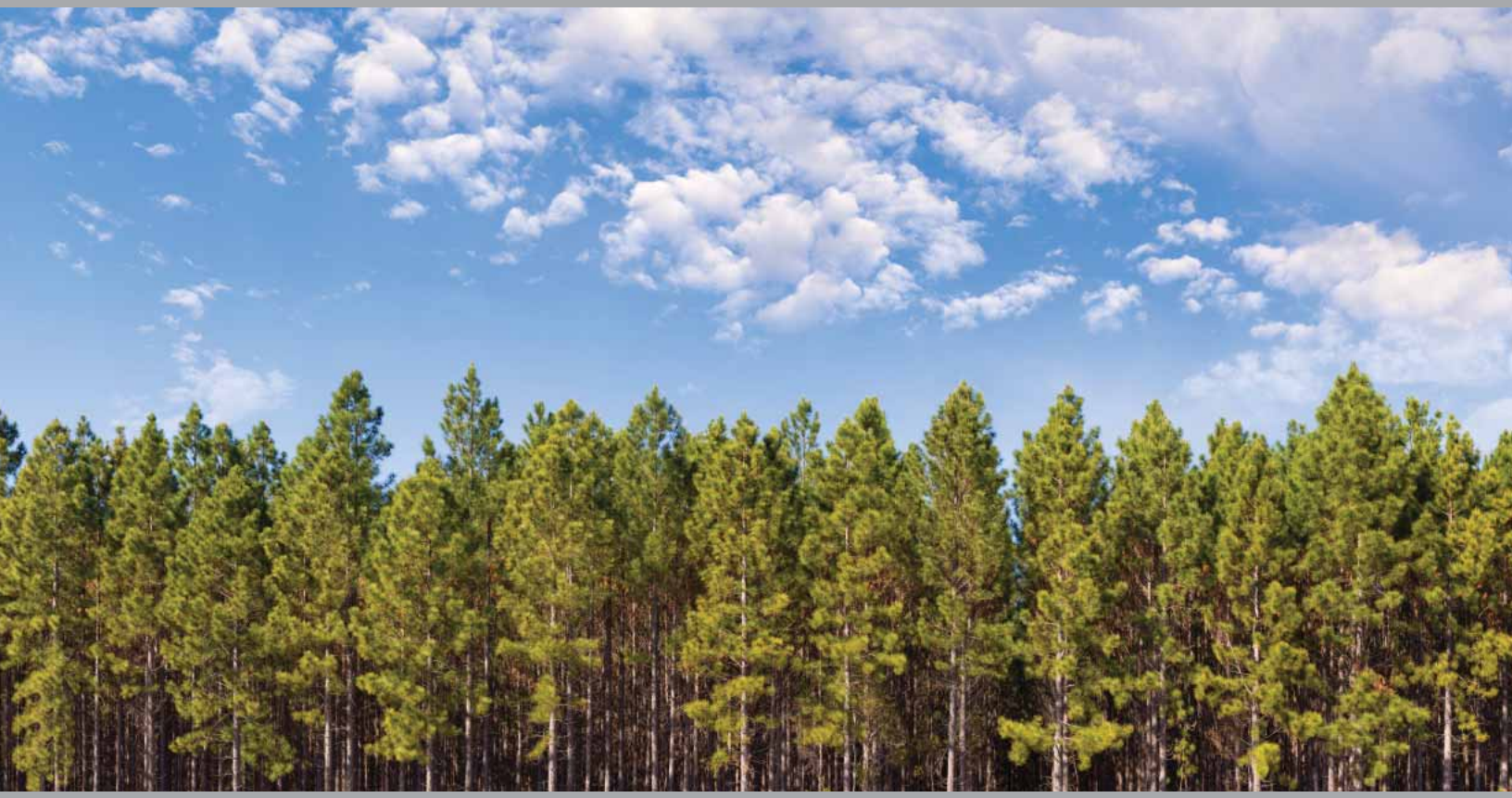

Why Wood Heating?

Rising cost of fossil fuels and growing concern for the environment have led to an increasing demand for renewable energy. Modern wood heating is an eco-friendly and economical alternative (or addition) to conventional fossil fuel heating systems.

Did you know?
A number of federal, state and utility incentive programs are available throughout North America.
Visit www.dsire.org for a list of U.S. state incentive programs.
In Canada, check the Natural Resources Canada website www.nrcan.gc.ca. Or contact your local Viessmann Sales Representative.

Sustainable
When harvested in conjunction with sustainable forestry, wood is a renewable and environmentally-responsible form of energy and an important part of sustainable resource management.

CO_2-neutral
Burning wood releases as much CO_2 as trees absorb in their lifetime. Heating with wood is therefore CO_2-neutral and does not contribute to climate change.

Economical
As a local energy source, wood is affordable and independent of wide price fluctuations. In times of volatile energy prices, wood remains stable and highly competitive.

High-tech and reliable
Modern biomass systems are fully-automatic and equipped with high-tech control and safety devices for reliable, efficient and safe operation.

Local and independent
Wood is a local staple and independent of wide price fluctuations. Wood is harvested with minimal energy input and contributes to the regional economy.

What You Need to Know

What type of wood can I use?
Viessmann-KÖB wood heating systems can use a variety of untreated, high-quality wood fuels that vary in heating value, required storage capacity and cost (see right column). What fuel type you choose will largely depend on your storage capacity, system requirements and the availability of the fuel in your area. As the quality of the fuel impacts the efficiency and life expectancy of your system, it is best to choose a good-quality, untreated wood fuel with a low water content.

How economical is it?
In a biomass system, the fuel cost is an estimated 50% of the total lifecycle cost. Choosing a high-efficiency wood-fired boiler and high-quality, cost-efficient wood fuel thus is key in optimizing the economy of your system. Compared to traditional fossil fuels, the average cost per heat unit of wood fuel is significantly lower in most areas in North America. So while the investment cost of a biomass system may in many cases be higher than a conventional heating system, the fuel cost savings per unit of heat can offset the investment in a relatively short timeframe - making your biomass system as economical or better than a fossil fuel heating system. Plus, with a fuel source that is local and independent, your fuel cost is less volatile than with traditional fuels.

Is it safe?
Absolutely. Today's wood heating systems are as safe and reliable as leading gas/oil heating systems. Equipped with advanced safety and fire protection devices, and a digital control, the entire system is closely monitored and controlled - from the fuel feed right to the heat transfer and venting.
Viessmann-KÖB wood-fired boilers are built to ASME, Section IV requirements, are CRN registered, and have been tested to CSA/UL Safety Standards (including all safety controls).

Is it clean-burning?
Yes! Modern wood heating systems, when professionally operated and maintained, reach similar emission levels to leading fossil fuel heating systems. Better yet, wood heating is CO_2-neutral. Viessmann-KÖB wood-fired boilers meet the stringent regulations of the European Clean Air Act.

What applications can it be used for?
Our wood heating systems are ideally suited for commercial and industrial applications, such as schools, hospitals, community heating systems, wood processing plants and more. They are designed to carry either the entire heating load of your system or the baseload, when combined with an oil-/gas-fired boiler for peak times.
Our comprehensive product portfolio also allows you to expand your biomass installation into a fully integrated system, complete with Viessmann solar, oil/gas boiler and custom control technology (see page 13).

Pellets
Most compact wood fuel with least storage required. High heating value.

Sawdust
Untreated sawdust. Ideal for small storage. Sawmills, carpentry, wood processing facilities.

Woodchips
Shredded, untreated, with or without bark. Large storage required. Max. size: G50. Max. water content: 50%.

Mixed Woods
Unprocessed mix of woodchips, sawdust and bark. Max size: G50.

One of Germany's largest facilities powered by KÖB biomass heating technology.
Recreational Pool and Spa. Kempten, Germany.

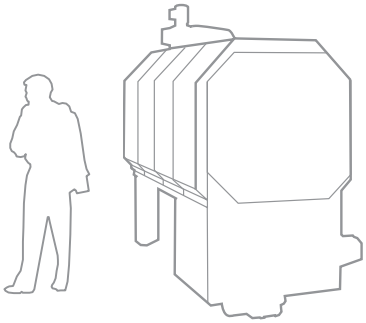

PYROT

Industry-leading rotary combustion wood-fired boiler, 512 to 1843 MBH

For wood fuels with max. water content of 35%

Industry-leading design

With its patented rotary combustion chamber design, the Pyrot boiler features the industry's most advanced combustion technology.
A feed auger continuously moves the wood fuel onto a moving grate, where gasification of the fuel (under precisely controlled primary air) takes place. The combustible gases (syngas) then rise into the rotary combustion chamber, where, through spin impulses of the rotation blower, the gases blend with precisely controlled secondary air, resulting in a complete combustion.

Clean-burning and efficient

Equivalent in quality to modern gas combustion, the advanced combustion process of the Pyrot also keeps emission levels of CO (<10 ppm), NOx (<75 ppm) and dust particles (<0.06 lb/MMBtu) to a minimum.‡

Plus, unlike oil or gas, wood is a CO_2-neutral, renewable form of energy. Used with our digital, modulating-output control, the Pyrot boiler achieves an efficiency of 85%†.

Portable boiler enclosure

The Pyrot is available as a portable boiler enclosure for applications where housing for the boiler is not available or onsite construction costs must be kept to a minimum.
This pre-packaged solution includes the boiler pre-installed in a specialized shipping container (see page 5) and all peripheral equipment.
Customized portable boiler enclosures are available to suit your individual needs.

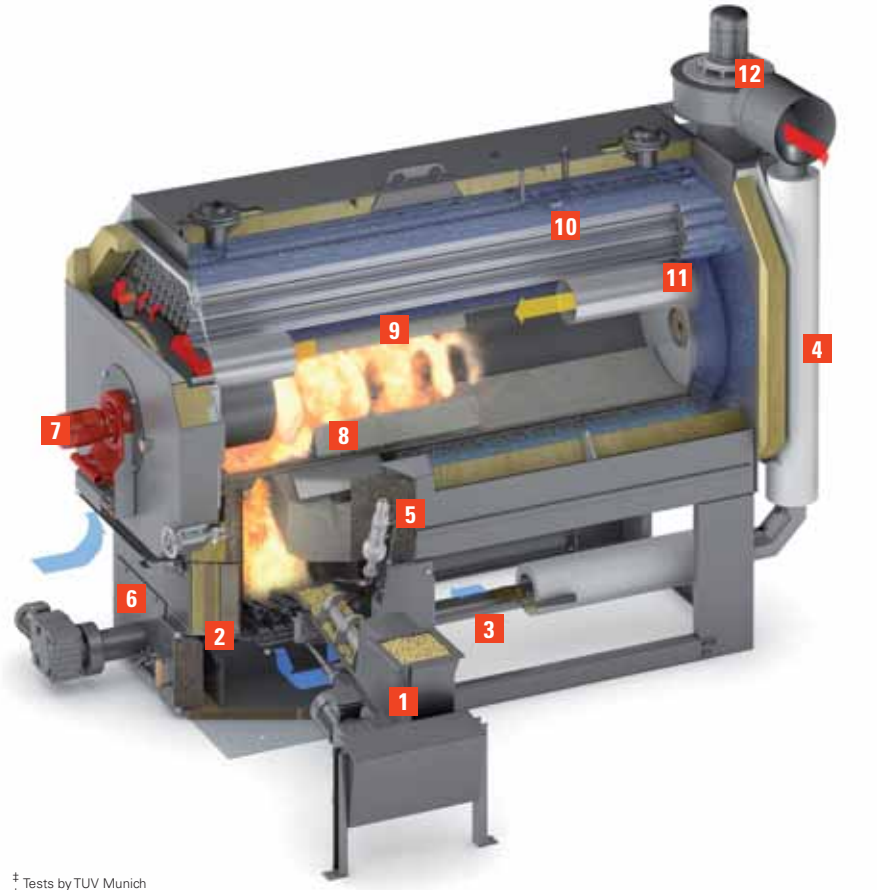

1. Feed auger (with light barrier)
2. Moving grate
3. Primary air intake
4. Flue gas recirculation system
5. Ignition blower
6. Deashing system
7. Secondary air intake blower
8. Swirling combustion system
9. Triple-pass heat exchanger
10. Safety heat exchanger
11. Pneumatic pipe cleaning system
12. Flue exhaust blower

‡ Tests by TUV Munich
† Efficiency based on the higher heating value of the fuel.

Pyrot with ash removal auger and external ash container

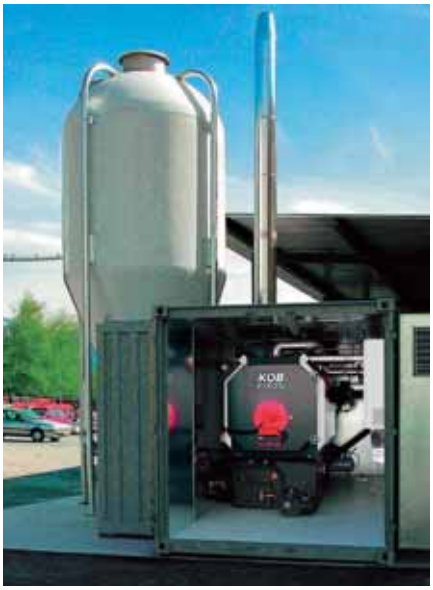

Portable boiler enclosure
(pellet silo field supplied)

Specifications

- Fully-automatic rotary combustion wood-fired boiler
- 5 models from 512 to 1843 MBH
- For dry wood fuels with max. water content of 35%
- Efficiency: 85%†
- Available for 30 or 60 psig max. operating pressure

For technical data, see page 12.

Benefits at a Glance

- High efficiency with advanced combustion technology, triple-pass heat exchanger and modulating output control (turndown ratio 4:1).
- Maximum heat transfer with triple-pass heat exchanger design.
- High efficiency and ultra-low emissions with precisely controlled primary and secondary air.
- Automatic ignition device limits idling and saves fuel.
- Low maintenance with fully-automatic deashing, optional pneumatic cleaning system and flue gas deduster.
- Advanced safety equipment ensures safe and reliable operation.
- Custom design of your system by our team of experts.
- Available as convenient portable boiler enclosure.

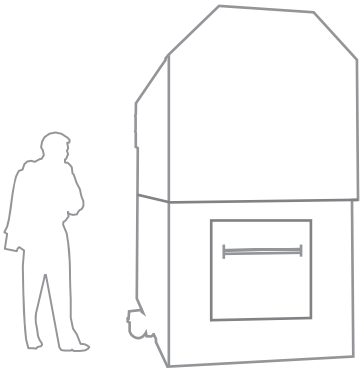

PYROTEC

State-of-the-art underfeed combustion wood-fired boiler, 1330 to 4268 MBH

For wood fuels with max. water content of 50%

Grate firing at its best

The Pyrotec boiler uses a burner trough with an attached external grate and a moving annealing grate to achieve optimal combustion results. A feed auger moves the wood fuel into the burner trough where the fuel is pre-dried and gasified under precisely controlled primary air (underfeed combustion). On the external and the moving annealing grate the fuel completely gasifies (syngas). Precisely controlled secondary air is injected to fully combust the syngas and thermal energy is released into the boiler's triple-pass heat exchanger.

Quality design and construction

The Pyrotec boiler is quality-constructed to handle the toughest of loads. The combustion chamber is lined with compressed firebricks with a high alumina content for added durability. All grate elements are made of durable cast chrome steel to withstand even the highest temperatures. The Pyrotec boiler features a classic triple-pass heat exchanger design for maximum heat transfer and efficiency.

Clean-burning and efficient

Equivalent in quality to modern gas combustion, the advanced combustion process of the Pyrotec keeps emissions of CO and NOx to levels comparable to those of modern fossil fuel heating systems. Plus, unlike oil and gas, wood is a CO_2-neutral, renewable form of energy. Used with our digital, modulating-output control, the Pyrotec boiler achieves an efficiency of 85%†.

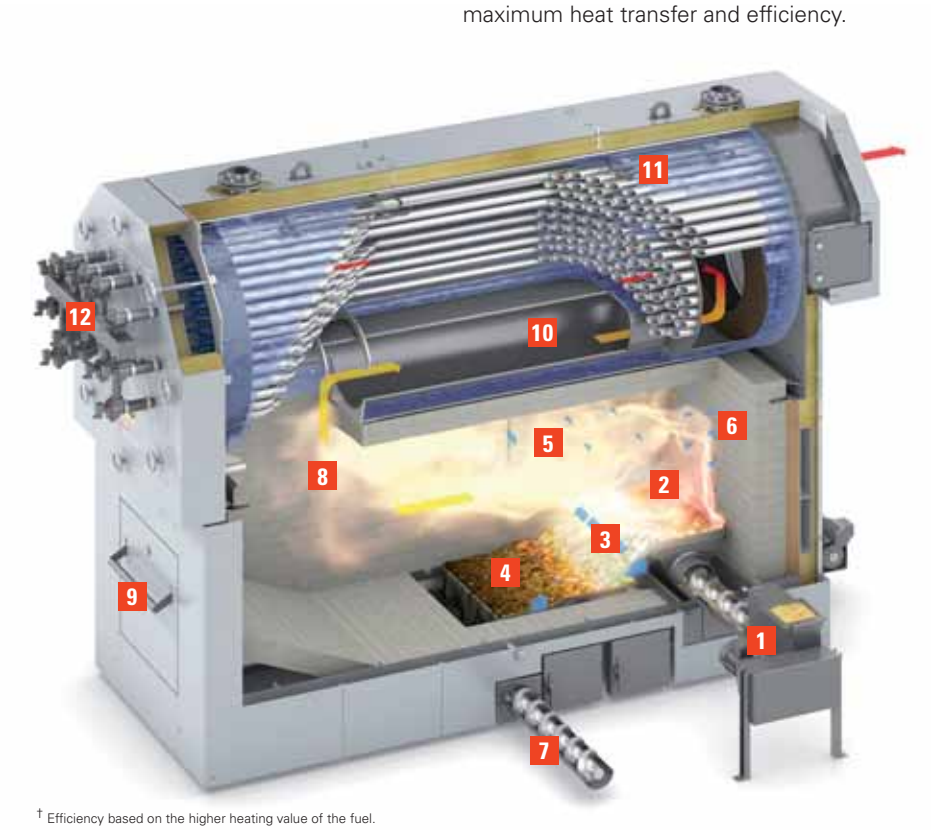

1. Feed auger (with light barrier)
2. Burner trough with internal grate
3. Sloped grate
4. Moving grate
5. Secondary air flow
6. Ignition blower
7. Deashing system
8. High-temperature burnout zone
9. Combustion chamber door
10. Triple-pass heat exchanger
11. Safety heat exchanger
12. Pneumatic pipe cleaning system

† Efficiency based on the higher heating value of the fuel.

Pyrotec boiler with feed auger and automatic fire-extinguishing safety system

Firebrick-lined combustion chamber with external grate and moving annealing grate.

Large, air-cooled combustion chamber door with solid double hinge. Creates a wide opening ideal for maintenance.

Specifications

- Fully-automatic underfeed combustion wood-fired boiler
- 5 models from 1330 to 4268 MBH
- For wood fuels with max. water content of 50%
- Efficiency: 85%†
- Available for 30 or 60 psig max. operating pressure

For technical data, see page 12.

Benefits at a Glance

- High efficiency with advanced combustion technology, triple-pass heat exchanger and modulating output control (turndown ratio 4:1).
- Maximum heat transfer with triple-pass heat exchanger.
- High efficiency and ultra-low emissions with precisely controlled primary and secondary air.
- Low maintenance with fully-automatic deashing, optional pneumatic cleaning system and flue gas deduster.
- Advanced safety equipment ensures safe and reliable operation.
- Maximum system performance with heavy-duty construction and all system components from one source.
- Automatic ignition device limits idling and saves fuel *(optional - only for fuels with >40% moisture content).*
- Custom design of your system by our team of experts.

Fully Automatic and Low Maintenance

A complete range of system components from one source ensures reliable and smooth operation of the entire system.

Flue gas deduster to meet low dust emission requirements.

Automatic deashing system *(optional)*
Clean combustion leaves behind wood minerals in the form of ashes. A moving grate extracts the ashes from the combustion chamber and transfers them into the ash bin. Once cooled, the ash removal auger extracts the ashes into a large external ash container.

Pneumatic cleaning system *(optional)*
A clean heat exchanger is key for the longevity and efficiency of a boiler. The pneumatic pipe cleaning system periodically removes ashes from the heat exchanger with micro blasts of compressed air, extending the boiler's maintenance-free operation period significantly.

Flue gas recirculation system
(standard for Pyrot, optional for Pyrotec)
Flue gas contains little oxygen (6-8%). When mixed with primary air, it ensures complete gasification of the fuel under air deficiency. This produces a low grate temperature that results in increased boiler efficiency, reduced particle emissions as well as greater grate longevity.

Flue gas deduster *(optional)*
Minimizes dust emissions by filtering the flue gases through a multi-cyclone array. Comes fully insulated with an exhaust fan mounted on the side or top, and a 64 USG ash container. A 212 USG ash container is optional.

(Only required for fuels with high fine particle content, e.g. waste wood from wood processing plants or woodchips with fine particle content of > 4%.)

Automatic firetube cleaning brush *(service tool)*
Automated, pneumatic, vibrating cleaning brush cuts the cleaning time of boilers by 50%. When inserted from the front and activated, the brush "runs" through the individual tube and back, gently removing ash and dust deposits. Clean fire tubes ensure optimal heat transfer and increased efficiency.

Ash removal auger and external ash container

Pneumatic cleaning system

Flue gas recirculation system

Complete Energy Management

High-tech modulating-output control systems for maximum and safe performance of the heating system.

Modern biomass control systems provide the same control convenience as most standard fossil fuel control technology.
Equipped with a modulating-output control and a thermal storage tank, the system supply temperature can be accurately modulated to outdoor weather conditions.

Ecotronic boiler control *(for Pyrot)*
Digital modulating-output control ensures optimal combustion by precisely controlling the ratio of combustion air, recirculated flue gas and fuel. The control monitors:

- Boiler supply/return temperatures
- Firebed level
- Light barriers of the feed system
- Flue gas temperature
- O_2 content of flue gas (Lambda sensor)

Pyrocontrol boiler control *(for Pyrotec)*
Fully-programmable modulating-output combustion and system control. The control regulates all variable-speed fans and monitors:

- Boiler supply/return temperatures
- Light barriers of the feed system
- Pressure sensor for reliable negative pressure
- Flue gas temperature
- Combustion chamber sensor (temperature high limit)
- O_2 content of flue gas (Lambda sensor)

Thermal storage tank
In a biomass system, a thermal storage tank is a key component in achieving maximum control accuracy (ability to adjust system output to actual demand). The storage tank facilitates temperature stratification, effectively reducing cycling of the firing system and accurately matching the system supply temperature to the heat demand.
Five sensor inputs are available on all controls for optimal burner modulation according to tank temperature.

Vitocontrol multi-boiler control
Custom control solution for the staging and rotation of two Pyrot or Pyrotec boilers and the energy management of other integrated energy sources (solar, oil/gas, electric). Controls joint storage and feed system and interfaces with Building Management Systems (BMS).

Remote monitoring system *(optional)*
Off-site monitoring and maintenance of the heating system via web-interface. Allows for the observation and adjustment of various system parameters. Optional LonWorks® and BACnet® interface for local supervision (other interfaces available upon request). Ideal for system monitoring in a public facility or at community/district heating plants.

CSA approved
All biomass control systems are built in-house, and are CSA approved in North America in conjunction with our wood-fired boilers. Plus, benefit from...

- fast installation with all functions in one control
- ease of service and maintenance
- wiring diagrams for each system

Ecotronic and Pyrocontrol come integrated into a CSA approved electrical panel.

Storage and Feed Systems

Each fuel storage and feed system is unique and designed for a specific application. Our advanced, fully-automatic feed solutions come ready for installation.

All Viessmann-KÖB wood-fired heating systems come equipped with...

- large-diameter heavy-duty augers
- spur wheel back-geared motors for high torque
- optimized and large-dimension load passages
- certified equipment for effective fire protection

Basement storage with auger extraction
Basement rooms or rooms previously used for oil storage can be transformed into a pellet storage area without extensive remodeling. Pellets can be blown in over large distances and special feeders transport the pellets reliably and with little energy use.

Bunker with rotary sweep extraction
A low-cost option for smaller square or slightly rectangular bunkers. A rotary sweep system moves the fuel onto an extraction auger.

Bunker with walking floor extraction
Ideal for large, rectangular storage bunkers. Sliding hydraulic pushrods move the fuel onto a conveyor auger. Allows for fast filling of large amounts of fuel.

Silo funnel extraction
A pendulum system in the funnel extracts fuel from the silo. Fail-safe due to automatic reverse gearing. A fire-proof certified rotary valve separates the silo from the heating system. Recommended system for wood processing facilities.

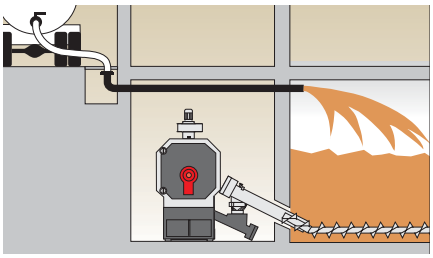

Basement storage with pellet auger

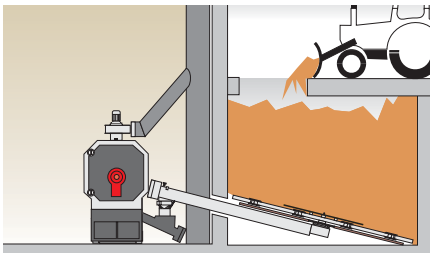

Bunker with rotary sweep extraction

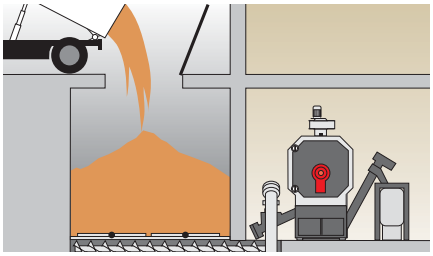

Bunker with walking floor

Walking floor installation

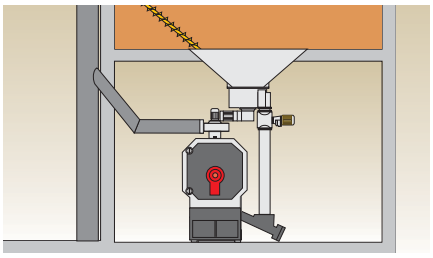

Silo funnel extraction

Safe and Reliable Operation

Viessmann-KÖB wood-fired boilers are built to meet the most stringent safety requirements. High-tech, state-of the-art safety equipment ensures a safe and reliable operation of your system at all times.

Backflash safeguard
A water-filled metering container attached to the feed auger and controlled by an optical sensor. Prevents sparks from entering the fuel storage area. The backflash safeguard is a CSA safety requirement.

Burnback preventer
A sensor located in the fuel feed pipe detects any danger of burnback and quickly counteracts by increasing the feed to the boiler.

Burnback safeguard
A spring-loaded horizontally-acting slide valve interrupts the fuel line in case of power failure or danger of burnback.
If the fuel storage room is under negative pressure a rotary valve is used instead of the slide valve for the same function. The rotary valve prevents unwanted air leaks from reaching the combustion process.

Automatic fire-extinguishing system
A fire extinguishing water tank (25 ltr/6.6 USG) with flow switch will empty and prevent burnback in case of malfunction. If there is a shortage of water, the system will switch off automatically.

Safety heat exchanger
A safety heat exchanger built into the boiler connects to city water and prevents the boiler from overheating in case of a power outage. A non-electric, thermally activated valve is triggered at a fixed boiler temperature and cools the boiler water via indirect heat transfer through the heat exchanger.

Additional safety devices
In addition to the safety equipment listed, Viessmann-KÖB wood-fired boilers come with the standard safety devices required by the Safety Standards.

- Fixed temperature high limit
- ASME pressure relief valve
- Low water cut-off (LWCO)
- Pressure and temperature gages

The Pyrot and Pyrotec boilers are built to ASME, Section IV requirements and 30 or 60 psig max. operating pressure. They have been tested and approved to applicable CSA/UL Safety Standards. Pressure vessels for Canada are registered in each province with a Canadian Registration Number (CRN).

C US

Technical Specifications

Pyrot Rotary Combustion Boiler

For wood fuels with water content < 35%

Model		KRT-150	KRT-220	KRT-300	KRT-400	KRT-540
Output	MBH	512	751	1024	1365	1843
	kW	150	220	300	400	540
Efficiency		85%†				
Max. Operating Pressure		30 or 60 psig				
Dimensions (inches)	Height	70	80	80	90	92
	Length	92	97	97	110	120
	Width	40	52	52	62	62

† Based on the higher heating value of the fuel.

Pyrotec Underfeed Combustion Boiler

For wood fuels with water content < 50%

Model		KPT-390	KPT-530	KPT-720	KPT-950	KPT-1250
Output	MBH	1330	1809	2457	3242	4268
	kW	390	530	720	950	1250
Efficiency		85%†				
Max. Operating Pressure		30 or 60 psig				
Dimensions (inches)	Height	94	100	112	120	130
	Length	129	150	153	150	170
	Width	49	50	55	64	64

† Based on the higher heating value of the fuel.

The Perfect Match for Your System

With Viessmann system technology and services you can easily expand your biomass system and reap the added benefits from a fully integrated renewable energy system.

Unique product mix
With our complete line of commercial high-efficiency fossil fuel boilers, solar thermal systems, advanced biomass heating and custom control technology, you are uniquely positioned to meet the requirements of the most complex energy projects. Whether as a fully integrated system or single-energy application, our products are designed to integrate perfectly and to generate maximum energy savings and system performance for your application.

Expert design services
Whether you are an engineering consultant, an energy service company or design build contractor, our dedicated in-house biomass project team is there to assist with your project every step of the way.
From the custom design of your integrated multi-energy project to incorporating your control strategy into our commercial hydronic system, tap into our team's extensive product and design knowledge to get the best possible results from your system.

Performance solar systems
Our high-performance flat plate and vacuum tube solar systems are ideal to heat domestic hot water and to provide space heating backup for your biomass system.

By integrating solar, you can offset your domestic hot water heating cost by as much as 65% (depending on size of solar system) and further reduce your environmental footprint.

Powerful DHW tanks
Our Vitocell line of indirect-fired domestic hot water (DHW) storage tanks offers high-quality construction and fast recovery rates for an abundant, reliable hot water supply at all times. For applications with a high hot water load, combine our vertical or horizontal DHW tanks into tank batteries. Integrating indirect domestic hot water heating in your biomass system can save as much as 50% in operating cost compared to conventional direct-fired hot water production.

Proven heating boilers
In an integrated renewable energy system, biomass heating is often coupled with conventional oil-/gas-fired boilers to handle peak loads or to provide backup to the biomass boiler. Depending on the type and temperature requirements of your system, Viessmann offers highly-efficient wall-mount and floor-standing condensing boilers or sectional cast iron boilers to integrate with your biomass system.

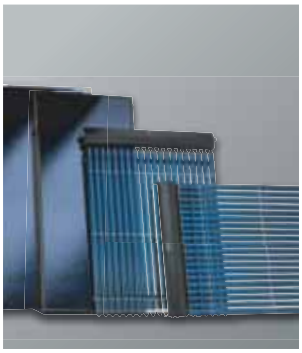

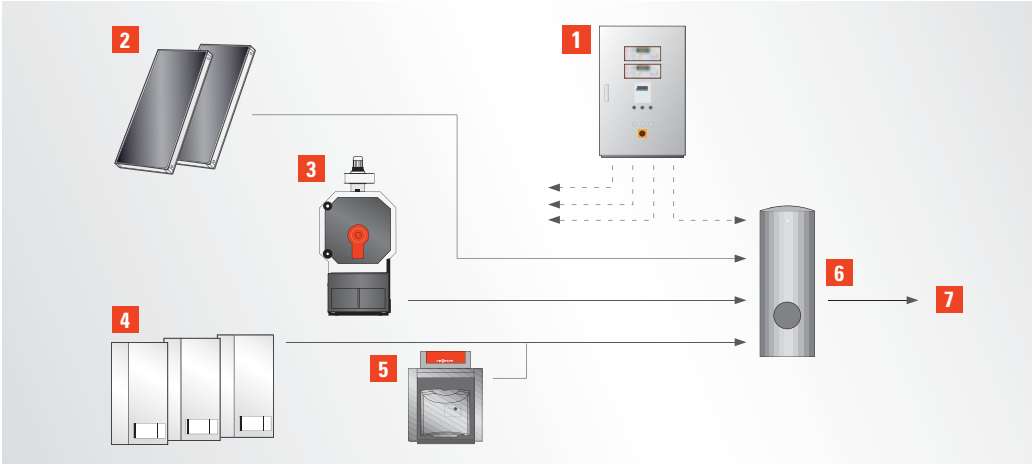

1 Viessmann custom control panel
2 Solar thermal system
3 Wood heating system
4 Condensing boiler(s)
5 Non-condensing boiler
6 Thermal storage tank
7 System distribution

Biomass Systems at Work

More than 1500 installations worldwide are powered by KÖB biomass technology.

KÖB biomass systems
For over 30 years KÖB has installed large-scale, wood-fired heating systems, and has earned recognition for innovative and environmentally-friendly product advancements. KÖB is part of the Viessmann Group of innovative, high-efficiency heating solutions and renewable energy systems.

KÖB

VIESSMANN Group

Harney District Hospital
Burns, Oregon

Design and commissioning services
Each Viessmann-KÖB installation begins with a system design from our in-house team of experts. By examining the unique requirements and conditions of your project, we propose a customized system solution – from a stand-alone wood-fired boiler to a fully integrated system, including fossil fuel heating and solar systems.

Comprehensive system solutions and services from one manufacturer!

University of Northern BC
Prince George, British Columbia

College of the Atlantic
Bar Harbor, Maine

Cité Verte, Green Community Development
Québec City, Canada

The Viessmann Group

Since 1917 Viessmann has been committed to providing heating solutions that are convenient, economical and environmentally responsible.

The Viessmann Group
For three generations Viessmann has provided efficient and environmentally-responsible heating solutions, tailored to the needs of our customers. Through ongoing research and product development, Viessmann has pioneered technologies that set standards and made the company a technological innovator and industry pacesetter.

Viessmann International
With 13 manufacturing facilities in Europe, Canada and China, sales organizations in 36 countries, and 120 sales offices worldwide, Viessmann provides a strong global presence and customer proximity. In North America, Viessmann has delivered state-of-the-art heating solutions for over 25 years. With three locations across North America, an outstanding support network, and Academy training, Viessmann provides top-quality service and support that is second to none.

Our Values
Environmental and social responsibility, fair business practices, and striving for perfection and maximum efficiency in all company operations are core values for Viessmann. Together with our products and services, this allows us to offer our customers and partners the benefit and added value of a strong brand.

Oil-fired boilers
Viessmann offer a comprehensive range of oil-fired boilers, including highly efficient low temperature boilers for residential and commercial applications (from 83 to 4387 MBH).

Gas-fired boilers
The complete range of Viessmann condensing and non-condensing gas-fired boilers offers highly efficient and advanced heating solutions for all applications (from 37 to 1480 MBH).

Solar heating
Viessmann is a leading manufacturer of solar systems. Innovative flat-plate and vacuum tube collectors ensure reliable and efficient solar energy harvest for DHW, space heating backup or pool heating.

Wood-fired boilers
Computer controlled and fully-automated, large-scale biomass systems from Viessmann feature industry-leading wood heating technology for safe, reliable and trouble-free operation (from 512 to 4268 MBH).

climate of innovation®

VIESSMANN Group

North American and Canadian Head Office
Viessmann Manufacturing Company Inc.
Waterloo, ON Canada
Tel. (519) 885-6300
Fax (519) 885-0887
www.viessmann.ca

U.S. Head Office
Viessmann Manufacturing Company (U.S.) Inc.
Warwick, RI U.S.A.
Tel. (401) 732-0667
Fax (401) 732-0590
www.viessmann-us.com

Sales Center
Viessmann Manufacturing Company Inc.
Langley, BC Canada
Tel. (604) 533-9445
Fax (604) 533-9439
www.viessmann.ca

Other Viessmann Group facilities in North America

BIOFerm™ Energy Systems
617 North Sage Road
P.O. Box 5408
Madison, WI U.S.A.
53705
Tel. (608) 845-2193
www.bioferm-es.com

BIOFerm™ Energy Systems is a renewable energy company that designs and constructs dry fermentation biomass plants. BIOFerm™ technology utilizes organic waste materials to produce high quality biogas for the generation of renewable electricity, heat and fuel. With offices all over the world, BIOFerm™ plays an important role in the renewable energy division at Viessmann.

Technical information subject to change without notice.
5730 735 v1.3 08/11 Printed in Canada